WARNING SAFETY RULES AND INSTRUCTIONS FOR BIL-JAX UTILITY SCAFFOLD

Any piece of equipment can be dangerous if not operated properly. **YOU** are responsible for the safe operation of this equipment. The operator must carefully read and follow any warnings, safety signs and instructions provided with or located on the equipment. Do not remove, defeat, deface or render inoperable any of the safety devices or warnings on this equipment. **IF** any safety devices or warnings have been removed, defeated, defaced or rendered inoperable, **DO NOT USE THIS EQUIPMENT!!!**

WARNING
Improper erection, dismantling or use of Pro-Jax utility scaffold may result in serious injury or death!! Erectors, dismantlers and users of Pro-Jax utility scaffold must read and fully understand these Safety Rules and Instructions as well as all federal OSHA, state, and local regulations pertaining to this equipment prior to its use. For any questions concerning the proper erection, dismantling, or use of Pro-Jax utility scaffold, please call 1-800-537-0540 before use.

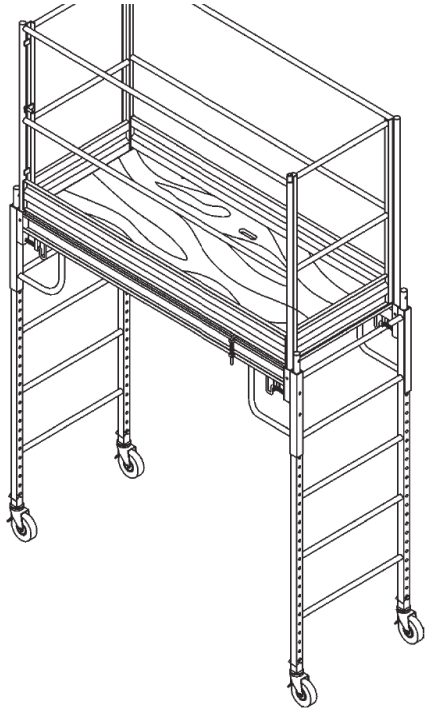

LOAD CAPACITIES

6' Length Unit - 1000 lbs.
8' Length Unit - 500 lbs.
10' Length Unit - 500 lbs.

STACKING INFORMATION - QUICK REFERENCE TABLE

	Number of Frames High	Maximum Platform Height	Maximum Work Height	Guard Rail Required	Outriggers Required	Meets 3:1 Height to Base Req.	Meets 4:1 Height to Base Req.
6' Long Pro-Jax Utility Scaffold	1 2 .	6' 11' 6"	12' 6" 18'	* Yes	No Yes-Narrow	Yes Yes	Yes Yes
8' Long Pro-Jax Utility Scaffold	1 2 .	6' 11' 6"	12' 6" 18'	* Yes	No Yes-Narrow	Yes Yes	Yes Yes
10' Long Pro-Jax Utility Scaffold	1 2 .	6' 11' 6"	12' 6" 18'	* Yes	No Yes-Narrow	Yes Yes	Yes Yes

* When platform height exceeds 4 ft., guard railing is recommended, but is not required. However, OSHA requires guard rails for all platforms 10 ft. or higher.

Pre-planning and study are essential for the proper and safe use of any scaffold equipment. You must first determine whether or not Pro-Jax utility scaffold is the best equipment for your particular job. You should discuss the following questions as well as any other questions you may have with your scaffold dealer or other qualified person:

- What job am I trying to complete?
- How high will I need to go?
- How large of a work platform will I need?
- Is the surface I am working on level?
- Are there any obstructions I will need to work around?
- Will the surface I am working on support the scaffold and its load?
- Will I need to move the scaffold from place to place on the jobsite?
- Are there power lines nearby?
- Are there any unique or special requirements for this job?
- Am I going high enough that I will need outriggers?

Warning metal conducts electricity. Do Not use this Scaffolding where it may come into contact with power lines or other electric circuts. Failure to comply to this warning will result in serious personal injury or death. For appropriate distances from High Voltage lines see chart on bottom of page 4.

ASSEMBLY INSTRUCTIONS

BUILDING A ONE FRAME HIGH SCAFFOLD

For proper assembly, your basic Pro-Jax Utility Scaffold must be comprised of 13 individual parts (plus guard rail panels when required).

Letter	Part	Qty.
A	End Frame	2
B	Side Brace	2
C	Platform	1
D	5" Caster	4
E	2" Snap Pin	4

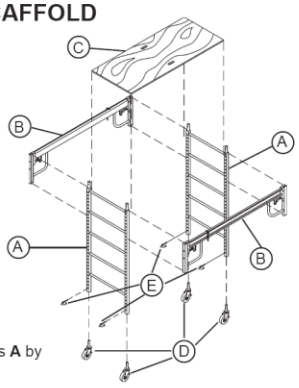

STEP ONE — Attach side brace **B** to two end frames **A** by following this sequence:

- Pull Saf-T-Lok pin at each end of side brace to the disengaged position. (see decal)
- While holding lock pin in disengaged position, place U-Channel on each end of side brace **B** around leg of end frame **A** at desired platform height.
- Release lock pin and be sure that pin fully engages into hole in end frame leg.
- Push in and rotate Saf-T-Lok™ counter clockwise until U-shaped end clears the brace locking pin support bracket as shown (LOCKED).
- To release, push in and rotate Saf-T-Lok™ clockwise until U-shaped end unseats from around the brace locking pin support bracket as shown (UNLOCKED).

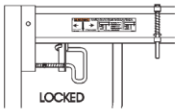

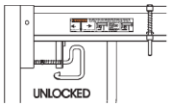

STEP TWO — Attach second side brace **B** to both end frames **A** following the same Step One sequence.

⚠ WARNING

- **Both side braces must be positioned at the same height on the frames so that platform is level.**
- **Be sure all 4 Saf-T-Lok pins are fully engaged in holes of end frames.**
- **Be sure all 4 Saf-T-Loks are in the locked position.**

STACKING PRO-JAX UNITS FOR ADDITIONAL HEIGHT

According to OSHA, all scaffolds must be restrained from tipping. This can be accomplished in one of three ways:

1. For free standing scaffolds, the maximum platform height must not exceed 3 times* the narrowest base dimension.
2. Guying the scaffold.
3. Tying the scaffold to a wall or other solid structure.

Federal OSHA allows a maximum platform height of 4 times the narrowest base dimension. However, **bil-jax recommends that the maximum height be limited to 3 times the narrowest base dimension on all Pro-Jax utility scaffolds.*

When additional platform height is required on a free standing scaffold, outriggers may be used to extend the base dimensions. **bil-jax** has two different size outriggers available for use with Pro-Jax units. Narrow outriggers (18") are for use with two frame high scaffolds and wide outriggers (46") are for use with three frame high scaffolds.

⚠ WARNING

Whenever Pro-Jax units are stacked, outriggers are required! Do not use a Pro-Jax utility scaffold over 1 frame high without outriggers. Failure to use outriggers will make scaffold more likely to tip over causing serious injury or death!!

BUILDING A TWO FRAME HIGH SCAFFOLD

If the platform height needed is between 6' and 11' 6", it will be necessary to install narrow (18") outriggers and a second scaffold level prior to use.

STEP ONE — Erect the base unit (one frame high scaffold) by following the previous instruction.

STEP TWO — Install casters into all four (4) outriggers and secure with snap pin provided with each caster. Set caster brake.

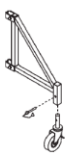

STEP THREE — Clamp outrigger to end frame at a 90° angle to the side brace. Tighten clamp securely. Clamp must be flush against scaffold leg and casters must be in contact with the surface.

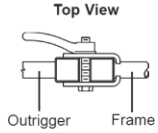

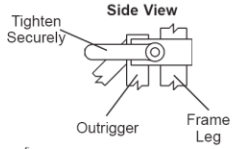

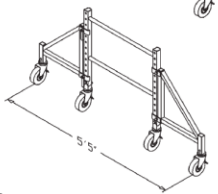

STEP FOUR — Add second scaffold level by stacking end frame over insert pins in top of base unit end frames. Secure in place with snap pins.

STEP FIVE — Install side braces (minimum two), platform, and guard railing at desired height per the previous instructions (Building a One Frame High Scaffold).

STEP THREE — Install platform **C** on side braces **B** so that platform is fully seated within inner channel on top of side braces.

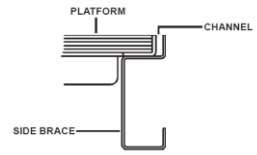

STEP FOUR — Rotate the platform clips into the engaged position.

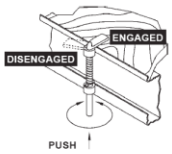

STEP FIVE — Install 4 casters **D** into legs of end frames **A** and pin with snap pins **E**. Set brake on each caster.

STEP SIX — (When recommended or required) When platform height exceeds 4 ft., guard railing is recommended, but is not required. However, OSHA requires guard rails for all platforms 10 ft. or higher. Install each guard rail panel (2 required) into sockets in side braces **B** and secure with lock pin. Be sure that guard rail gate swings inward over the platform.

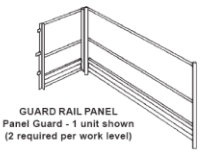

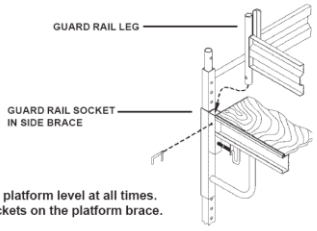

Unique design allows the guard railing to stay at the platform level at all times. Guard railing does not fit on the frame but in the sockets on the platform brace.

⚠ WARNING

Guard rail must be installed so that gate swings inward over platform. Failure to install guard rail properly may result in serious injury or death!

⚠ WARNING

- **Recheck all side brace lock pins for full engagement and that the Saf-T-Lok™ is in the locked position before accessing platform.**
- **Recheck platform to be sure it is properly seated within side brace channel and the platform clips are fully engaged before accessing.**
- **When accessing platform, climb over top of end frame ladder — do not swing around side of end frame.**

ADDITIONAL COMPONENT AVAILABLE

INSTALLATION OF WIDE BASE EXTENSION — Install by inserting base frame into vertical channels of wide base extension. Pin into place with snap pins.

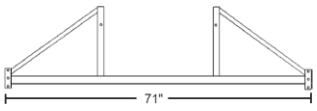

WIDE BASE EXTENSION

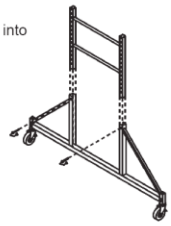

DISMANTLING NOTES

AS ADAPTED FROM THE

SCAFFOLDING, SHORING & FORMING INSTITUTE (SSFI)

The work of dismantling scaffolding should be under the supervision of an individual with proper experience and aptitude (competent person). The following should be observed while dismantling.

1. It shall be the responsibility of employees to read and comply with the following common sense guidelines which are designed to promote safety in the dismantling of scaffolding. These guidelines do not purport to be all inclusive nor supplant or replace other additional safety and precautionary measures that may be necessary to cover usual or unusual conditions.
2. Check to see if scaffold has been structurally altered in any way which would make it unsafe; and, if so, reconstruct where necessary before commencing with the dismantling procedures.
3. Dismantle scaffold from the top down. Begin by removing all accessories from that section being dismantled at the time.
4. On stacked scaffolds do not remove ties and braces until dismantling has reached the section to which they are attached.
5. Always work within the inside of the scaffolding.
6. When moving up or down the scaffold do ***not*** climb on ties, braces or unbraced components. Climb over the top of the end frame. Do not swing around outside of the end frame.
7. Be sure that area below is clear of personnel not involved in the dismantling and is secured against unauthorized access.
8. Lower scaffold components in a safe manner as they are dismantled. Avoid dropping or throwing the components as this could result in injury to personnel below, or damage to the equipment.
9. Use energy absorbing lanyards and full body harness when feasible.

SCAFFOLDING SAFETY RULES

SERIOUS INJURY OR DEATH MAY RESULT FROM IMPROPER ERECTION OR USE of scaffolding equipment. Erectors and users must be familiar with and follow safe practice and the Safety Rules contained herein. These Safety Rules cover generalized situations only and do not purport to be all-inclusive, nor to supplant or replace other additional safety and precautionary measures that may be necessary to cover the many usual or unusual specific conditions encountered during installation, use and removal. The Rules are not intended to conflict with, or supersede the requirements of OSHA or any other governmental regulations, codes and ordinances; the user must refer to and comply with all such specific provisions of law.

A. FOLLOW SAFE PRACTICE, THE SAFETY RULES AND COMPLY WITH OSHA and all other federal, state and local regulations, codes and ordinances pertaining to scaffolding during any use of the equipment.

B. THE POTENTIALLY HAZARDOUS NATURE OF SCAFFOLDING ERECTION WORK makes it important that all personnel assigned to this work be instructed in these Safety Rules, safe practices and procedures and be under the supervision of an experienced and knowledgeable person. Assure that these Safety Rules are posted conspicuously and that all persons erecting and using the scaffold are aware of and follow them.

C. REPORT ANY UNSAFE CONDITIONS TO SUPERVISORS. Do not work or allow persons to work on scaffolds when sick or suffering from dizziness, unsteadiness or other physical symptoms which could affect their ability to work safely.

D. INSPECT ALL EQUIPMENT BEFORE USING. Never use any equipment which is damaged, defective or deteriorated in any way.

E. INSPECT ERECTED SCAFFOLD FREQUENTLY and be sure that they are maintained in safe condition, that scaffold connections have not become loosened and that components have not been improperly released or removed.

F. MAINTAIN ALL EQUIPMENT IN GOOD REPAIR. Never use corroded or excessively rusted equipment; the strength of such equipment is not known.

G. CONSULT YOUR SCAFFOLDING SUPPLIER WHEN IN DOUBT. NEVER TAKE CHANCES.

H. ALWAYS READ THESE SAFETY RULES in conjunction with the safety packet accompanying them or separately available from **bil-jax** scaffold upon request.

1. ALWAYS SUPPORT SCAFFOLDS FROM A SOUND, STABLE SURFACE and assure that it is adequate to support the intended scaffold loads. Never support scaffolds on unstable, loose objects which could tip, break or become dislodged.

2. LIFT AND LOWER COMPONENTS CAREFULLY AND SAFELY; use tag lines when appropriate to the handling method.
Never allow excessive quantities of components to be stockpiled on partially complete scaffolds. Stock only sufficient components consistent with the progress of the work. Lower dismantled components as soon as possible. Never drop components deliberately.

3. THE TYING OF THE SCAFFOLD TO THE STRUCTURE IS OF GREAT IMPORTANCE TO the stability and safety of the scaffold. Assure that the structure to which the scaffold is tied or anchored is capable of safely supporting all loads imposed by the scaffold.

4. FREE STANDING SCAFFOLDS other than wall scaffolds must be restrained from tipping by guying or other means or otherwise stabilized as appropriate, recognizing that stability is essential to the safety of the scaffold.

5. INSTALL GUARDRAILS, MID-RAILS, AND TOE BOARDS at all openings, open sides and ends of every work platform when recommended or required.

6. NEVER USE LADDERS OR MAKESHIFT DEVICES on tops of scaffold to increase the height. Never place plank on or stand on guardrails and mid-rails.

7. POWER LINES NEAR SCAFFOLDS ARE DANGEROUS. Use extreme caution and consult the power service company to have the lines de-energized, insulated or otherwise rendered safe. Never allow any installation or use of scaffolds until this is done.

REFER TO AND COMPLY WITH ALLOWABLE LOAD DATA SHOWN ON PAGE 1.

8. WHEN ANY CANTILEVERS ARE USED, such as brackets, etc., proper care and precautions must be taken to prevent tipping of the scaffold.

9. FOR ROLLING SCAFFOLDS FOLLOW THESE ADDITIONAL SAFETY RULES:
a. Never ride rolling scaffolds.
b. Remove all materials and equipment from the scaffold before moving.
c. Lock caster brakes at all times the scaffold is not being moved.
d. Do not attempt to move rolling scaffolds without sufficient help and roll on level surfaces only. Watch out for holes or floor obstructions and for overhead obstructions, including power lines, energized crane ways, and other hazards.
e. The maximum platform height of a rolling scaffold must not exceed four (4) times the narrowest dimension. Check local State/OSHA Regulations for other height/base limitations such as 3:1 in CA, OH, OR, MT and ME; 3.5:1 in WA. Comply with these regulations by appropriately widening and/or lengthening the scaffold at the lower levels so that the above proportions are not exceeded. If the base dimensions cannot be increased, extreme care must be taken to secure the scaffold from tipping; it must be guyed, or tied to a solid structure and maintained in a stabilized condition at all times so that it cannot tip over while supporting persons, while being moved or while being erected or dismantled.
f. Apply pulling or pushing forces at the bottom end frames and as close to the scaffold base as possible. Never attempt to move scaffold from on top.
g. If rolling scaffolds are used outdoors, care must be taken to assure that they cannot become unstable due to wind or other conditions.
10. DO NOT OVERLOAD SCAFFOLDS. Refer to and do not exceed the scaffold load data shown on page 1. For further information relative to specific scaffold installations that do not fall within this data, consult your **bil-jax** supplier.
11. BECAUSE OF DIFFERENCES IN DESIGN AND FIT, do not intermingle scaffold components of different manufacture

REFER TO AND COMPLY WITH ALLOWABLE LOAD DATA SHOWN ON PAGE 1.

NEVER USE THIS SCAFFOLDING WITHOUT INSTALLING THE SAFETY RAILING

MAINTENANCE PROCEDURES

For Pro-Jax Utility Scaffold Components

The following recommendations for maintenance are generalized and not intended to cover every specific situation or component. Safe Practices and common sense should be followed at all times. In case of doubt as to the best maintenance procedures to follow, please contact your **bil-jax** scaffold supplier.

IMPORTANT

1. SCAFFOLDING EQUIPMENT SHOULD NOT BE ALTERED OR MODIFIED FROM ITS ORIGINAL CONFIGURATION WITHOUT CONSULTATION WITH THE MANUFACTURER. EQUIPMENT WHICH IS DAMAGED OR BECOMES DAMAGED DURING USE, HANDLING, OR SHIPPING SHOULD BE SET ASIDE AND NOT USED.
2. PERTINENT OSHA REGULATION CFR 1926.451(a) (8) states: "Any scaffold including accessories such as arm braces, screw legs, ladders, brackets, etc. damaged or weakened from any cause shall be immediately repaired or replaced."
3. ANY SCAFFOLDING WILL BE HANDLED BY NUMEROUS PARTIES after it leaves the manufacturer/ supplier. The ultimate responsibility of avoiding the use of damaged equipment rests with the final user who has custody of it. Avoidance of hardship or inconvenience never justifies the use of damaged scaffolding equipment, which may result in severe injuries to personnel using such scaffolds.
4. Always read and follow Scaffolding Safety Rules accompanying these instructions or separately available at your request.

VISUAL INSPECTION

EQUIPMENT WITH THE FOLLOWING OR OTHER TYPES OF DAMAGE, SHOULD NOT BE USED UNTIL PROPERLY REPAIRED, OR REPLACED. CHECK ALL COMPONENTS FOR:

A. Straightness of members.
B. Welds that appear excessively rusty.
C. Broken welds or cracks at or adjacent to a weld - sometimes discernible as a thin rust line.
D. Cracks around part or all the circumference of tube members, not necessarily at a weld site. Rust line may be a visual "telltale."
E. Tubular members that are crushed, flattened or kinked. End frame, arm braces, and other members having this kind of damage may no longer be able to support their intended design loads.
F. Arm braces with broken or cracked welds, distorted shape or with broken or deformed U-channel. Arm braces with damaged or inoperable lock mechanisms including broken spring. Arm braces immediately support platforms and personnel and must always be checked very carefully. If in doubt, do not use.
G. Platforms with bent, missing or broken edge protection, support braces, or damaged plywood.
H. Casters with missing or damaged braking mechanism, damaged or loose wheels, axles, or stems.
I. EXCESSIVE RUST - (also see para. (J) under "Other Considerations"). The strength of excessively rusted components is not known.
J. End frames or other components with broken welds, missing parts, or which are bent, bowed, or out of alignment. Replace missing parts before use (see note (G) following).
K. Paint surfaces which are cracked and/or show areas where the paint has "crazed"; such signs may indicate prior damage and subsequent straightening. Such damage may also have overstressed the metal and weakened it.

OTHER CONSIDERATIONS

A. RUST. Some rusting of steel components is normal over a period of time, especially in areas where paint has been scraped off due to normal use and handling.
B. EXCESSIVE RUST - evidenced by pitting, flaking or powdering to the touch indicated that some of the parent metal has been eaten away. Such components are of uncertain strength and should not be used.
C. Certain types of atmospheric contamination, such as from salt water, power plants, paper pulp mills, petrochemical and copper or similar processing plants may severely corrode steel after relatively short exposures. Such corrosion may appear to be rust but is often of a brighter or different color than normal. Equipment of an unusual color, all over or in parts, must be checked for chemical corrosion or contamination. It is dangerous to continue to use such corroded components. areas will usually rust more quickly than the surrounding painted areas. Worn or old paint still provides some protection.
D. Equipment exposed to fire or undue heat may exhibit a gray, or smoke-blackened appearance combined with possible blistering paint. Such heat generally affects the strength of the material and makes it dangerous to continue its use.
E. Heat or corrosion-damaged equipment is of uncertain strength, which may only be determinable by destructive testing of all equipment suspected of being so damaged.

EQUIPMENT SUBJECT TO DESTRUCTIVE TESTS CANNOT BE RETURNED TO SERVICE.

F. The performance of all equipment is improved by regular maintenance, such as removal of plaster and other construction materials, lubrication as appropriate and painting periodically. If repainted, dipping or spraying by a method which assures that the paint gets to the inside of tubular members is recommended. Always thoroughly inspect for cracks and other damage before repainting.

Bil-Jax
125 Taylor Parkway • Archbold, OH 43502-9309 Phone: (419) 445-8915

Maintain safe distances away from electrical power lines and apparatus in accordance with applicable governmental regulations and the following chart

Voltage	Minimum Safe Approachable Distance	
Phase to Phase	Feet	Meters
0 to 300V	Avoid Contact	
300V to 50KV	10	3.1
50KV to 200KV	15	4.6
200KV to 350KV	20	6.1
350KV to 500KV	25	7.6
500KV to 750KV	35	10.7
750KV to 1000KV	45	13.7

Allow for mast movement and electrical line sway or sag, and be aware of strong or gusty winds. Do not use the scaffolding as a ground for welding.

If the person receiving this handout will not be the user of the equipment, forward these instructions to the operator. **IF** there is any doubt as to the operation or safety of the equipment, **DO NOT USE!!! CALL A TOOL SHED IMMEDIATELY!!! FAILURE TO FOLLOW THESE INSTRUCTIONS COULD RESULT IN INJURY OR DEATH**

6’ INDOOR STEEL SCAFFOLDING PARTS LIST

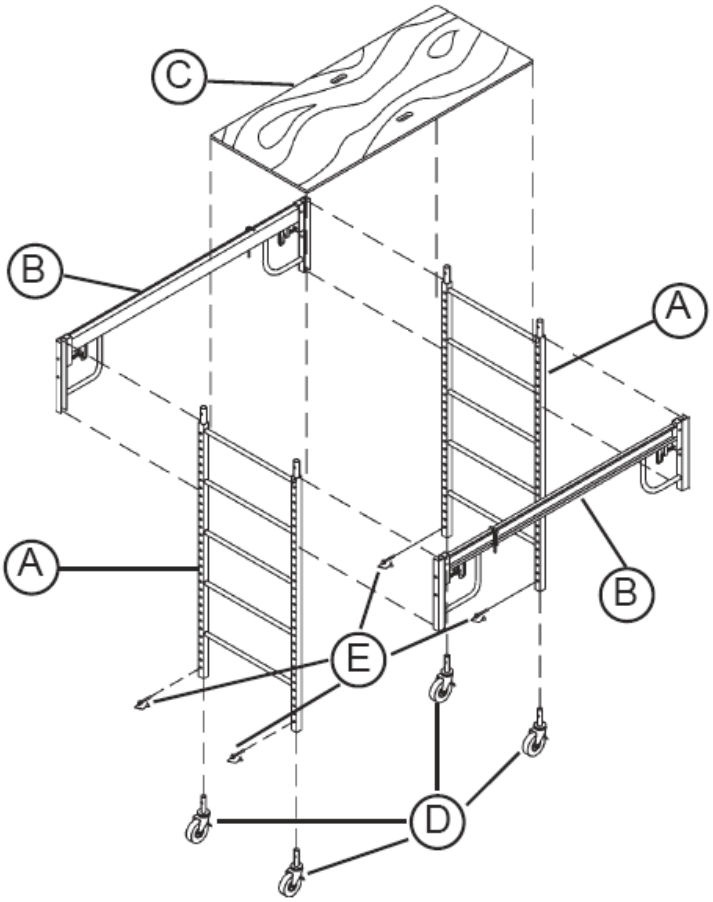

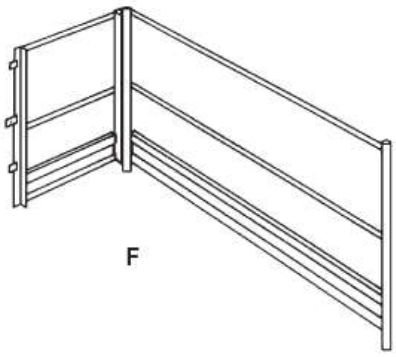

Letter	Part	Qty.
A	End Frame	2
B	Side Brace	2
C	Platform	1
D	5” Castor	4
E	2” Sap Pin	4
F	Guard Rail	2